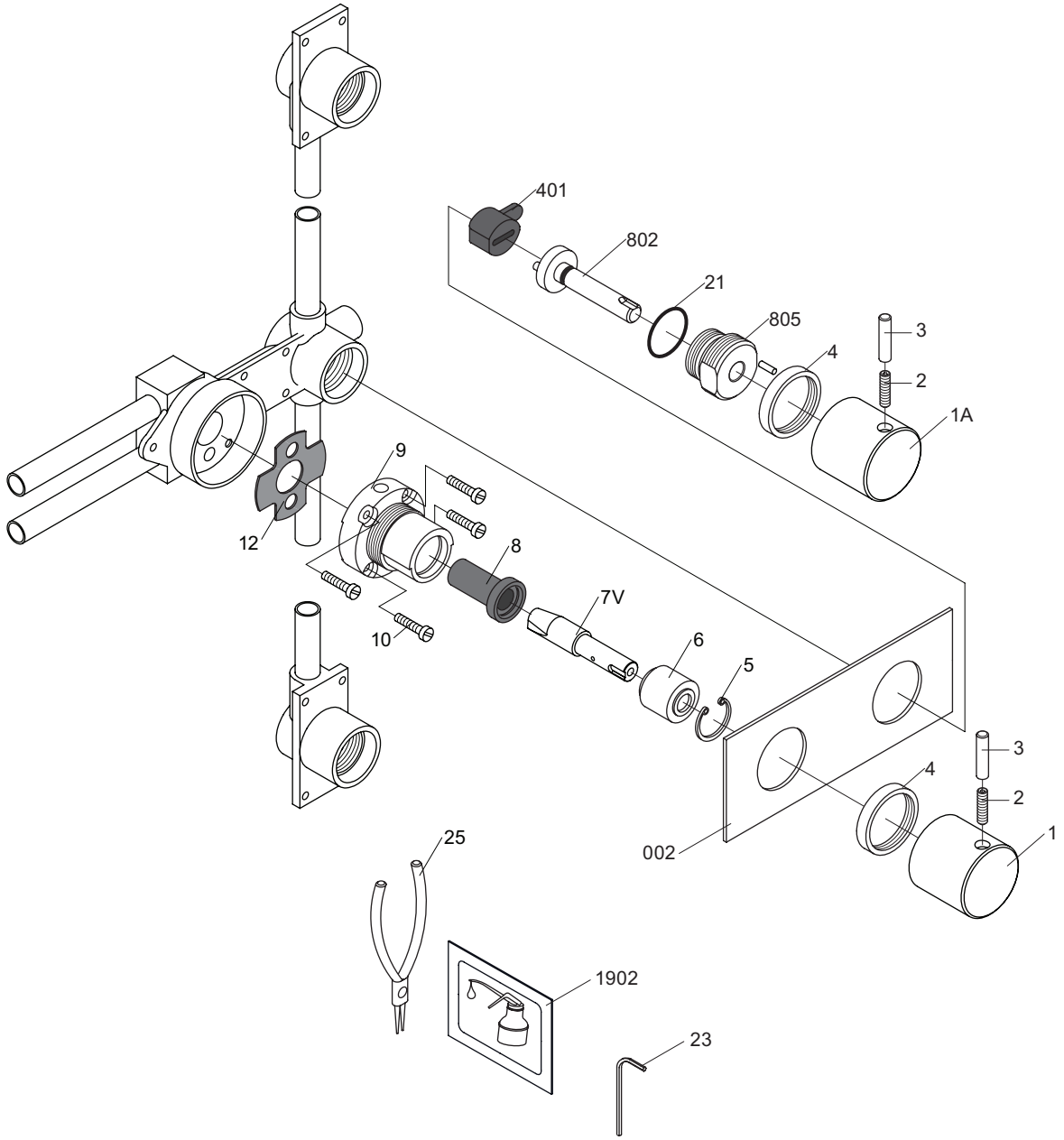


| | | |
|---|---|---|
| NR1: | VR1, VR2, VR3, VR4, VR23. | 727629.1xx |
| NR2: | VR1A, VR2, VR3, VR4, VR23. | 727629.2xx |
| VR9K: | VR5, VR6, VR7V, VR8, VR9, 4xVR10, VR12, VR23, VR1902. | |
| VR100: | VR5, VR6, VR8, VR23, VR1902. | |
| VR800: | VR21, VR23, VR401, VR802, VR1902 | 745132.310 |

vola
Lunavej 2
DK-8700 Horsens
Tlf : + 45 7023 5500
sales@vola.com
www.vola.com

# VOLA V400

Date
Jan. 70

Rev.
0

Sheet
SB 3